3. General Description

A: CAUTION

- When servicing a vehicle, be sure to turn the ignition switch to OFF, disconnect the ground cable from battery, and wait for 20 seconds or more before starting work.
- The airbag system is fitted with a backup power source. If the airbag system is serviced within 20 seconds after the ground cable is disconnected, it may deploy.

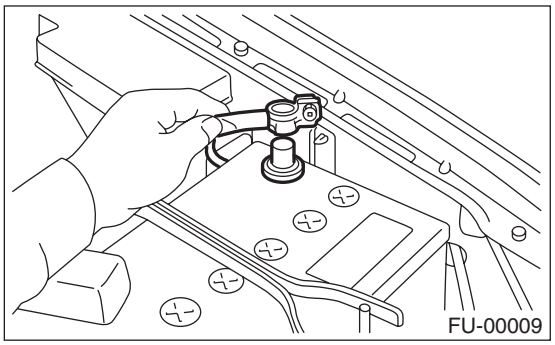

- If sensors, airbag module, airbag control module, pretensioner or harness is deformed or damaged, replace with new parts.

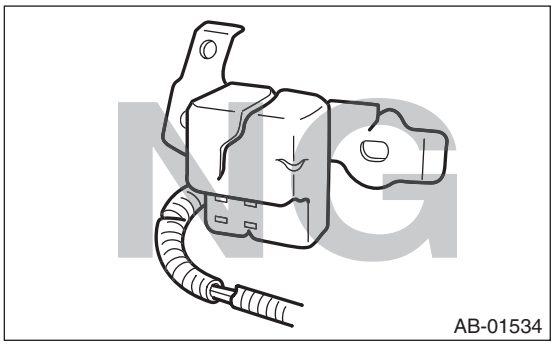

- Do not use the airbag system and pretensioners on other vehicles. When replacing parts, be sure to replace them with new parts.
- When checking the airbag system, be sure to use a digital circuit tester. Use of an analog circuit tester may cause the airbag to activate erroneously.

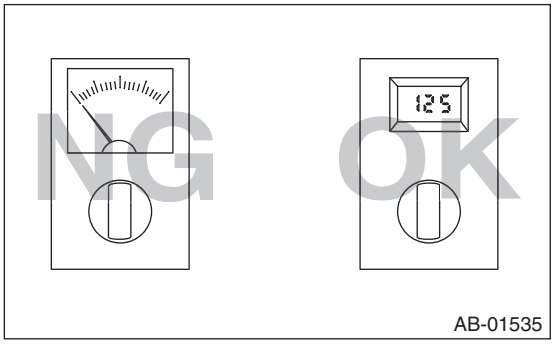

- When checking, use a test harness (1). Do not directly apply the tester probe to connector terminal of airbag.

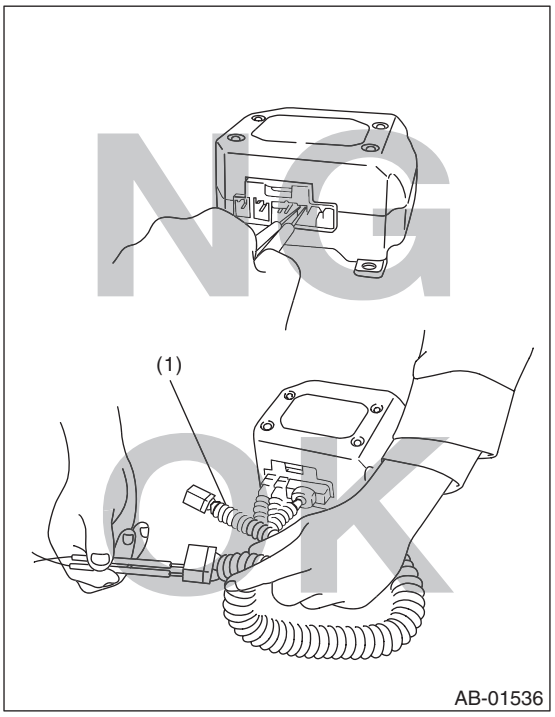

- Do not drop the airbag module parts, subject them to high temperature of 93°C (199°F) or more, or let water, oil or grease get on them; otherwise, the internal parts may be damaged and reliability greatly lowered.

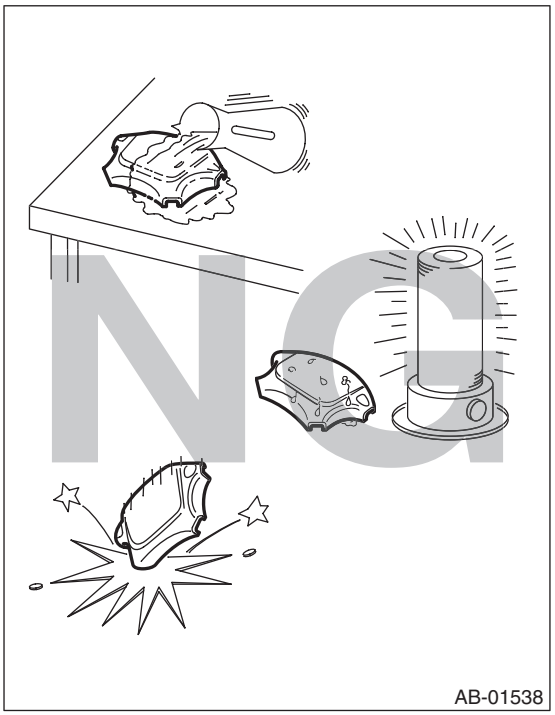

• If damage, open circuit or rust is found on airbag system wiring harness, do not use solder to repair. Replace the faulty harness with a new genuine part.

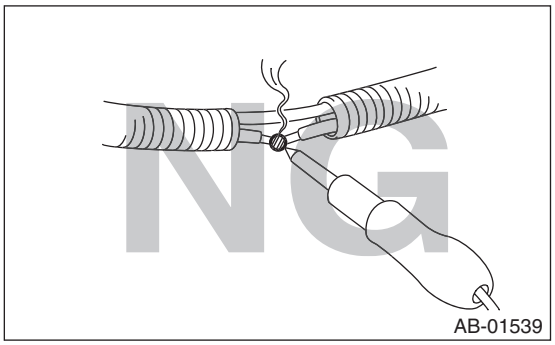

• Install the wiring harness securely with the specified clips to avoid interference or tangled with other parts.

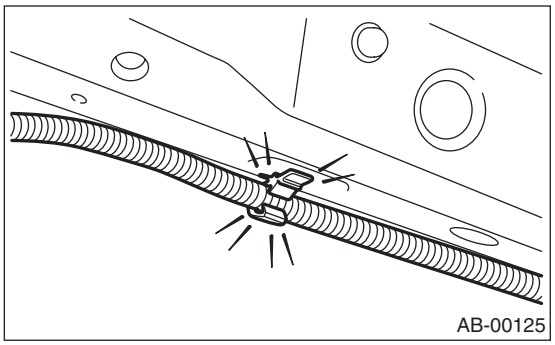

• Do not allow water or oil to come in contact with the connector terminals. Also, do not touch the connector terminals.

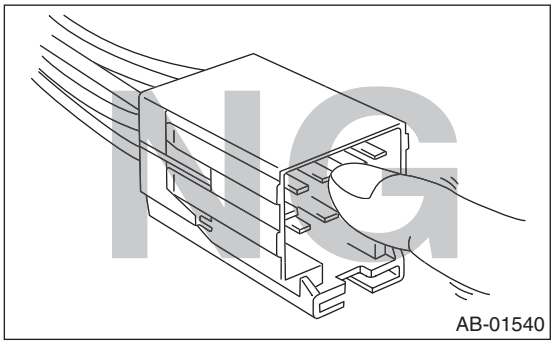

• Do not disassemble the airbag modules on the Driver's side, passengers side, or for the side airbag system.

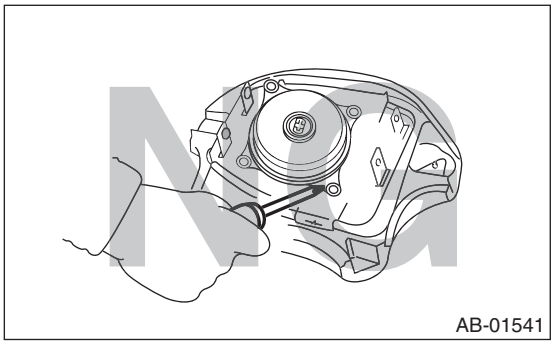

• The airbag module cannot be used again if deployed once.

• After removal, keep the airbag module with the pad facing upward on a dry, clean, and flat surface away from heat and light sources, and moisture and dust.

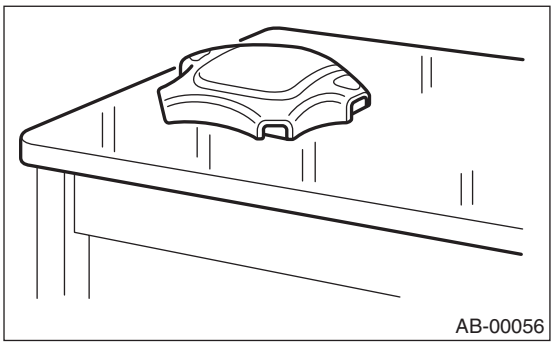

• Do not check continuity of the airbag modules on the driver's side, passenger's side, side airbag modules, or the pretensioner.

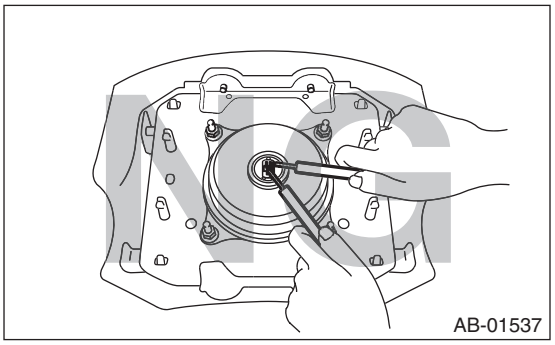

• The removed front seat with airbag module must be kept at least 200 mm (8 in) away from walls and other objects.

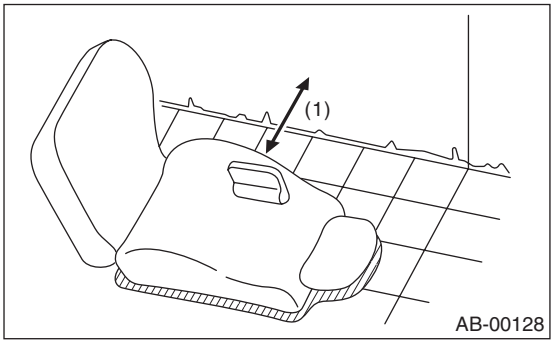

(1) 200 mm (8 in) or more

• When painting or performing sheet metal work on the front part of the vehicle, including the front wheel apron, front fender and front side frame, remove the front sub sensors and wiring harness of airbag system.

• When painting or performing sheet metal work on the side of the vehicle, including the side sill, center pillar and front and rear doors, remove the side airbag sensors and wiring harness of the airbag system.

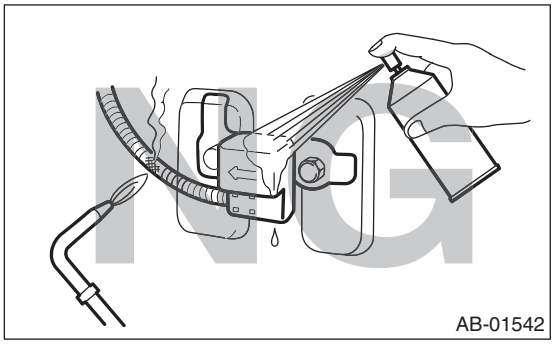

• Do not discard undeployed airbag module. They could easily cause a serious accident if accidentally deployed.

- When storing a removed airbag module, do not place any objects on the module or stack them on top of each other. If the airbag inflates for some reason when it is placed with its pad side facing downward or under any object, a serious accident may result.

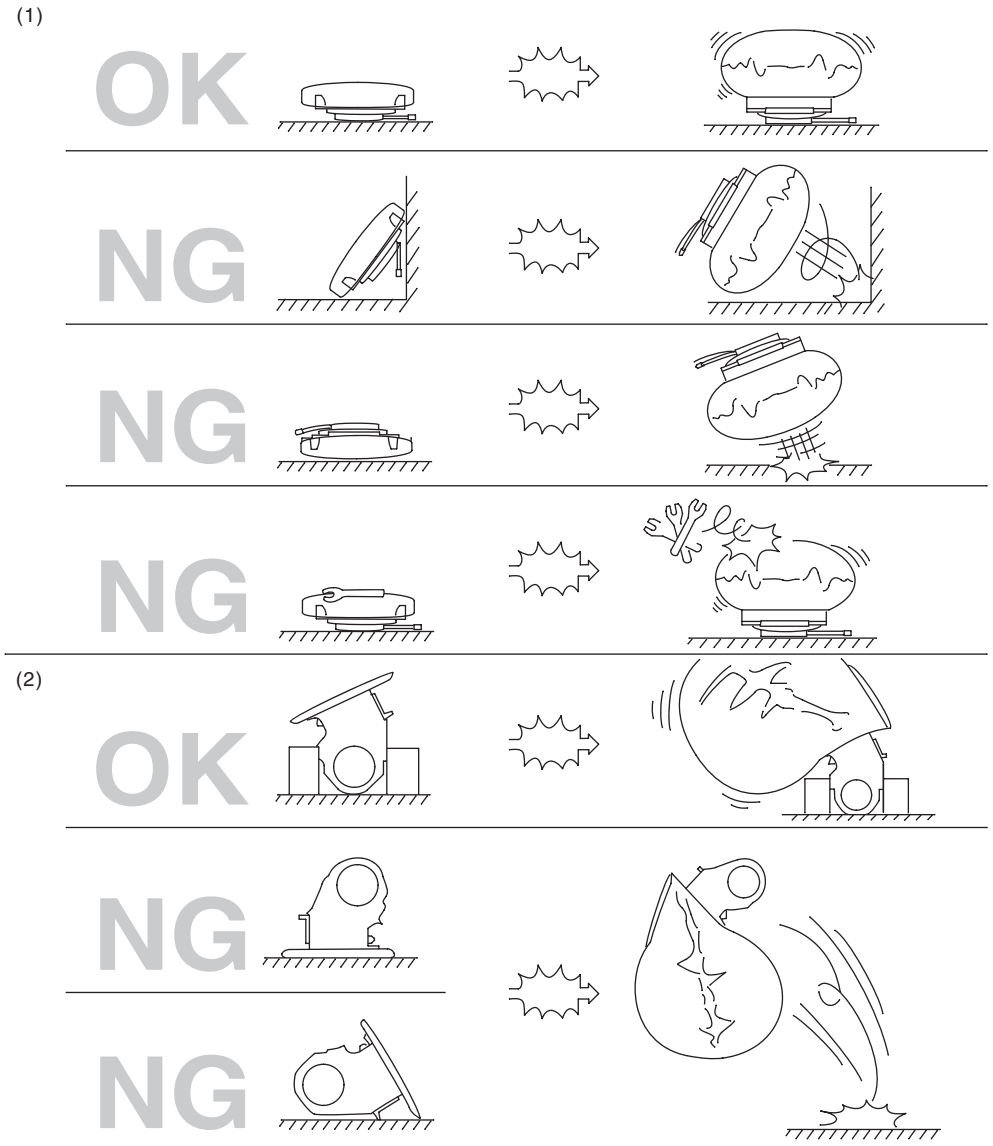

(1) Driver's airbag module (2) Passenger's airbag module

B: INSPECTION

Before diagnosing, check the following items that might be related to the engine problem:

1. BATTERY

Measure the battery voltage and specific gravity of the electrolyte.

Standard voltage: 12 V

Specific gravity: 1.260 or more

C: PREPARATION TOOL

1. SPECIAL TOOL

ILLUSTRATION	TOOL NUMBER	DESCRIPTION	REMARKS
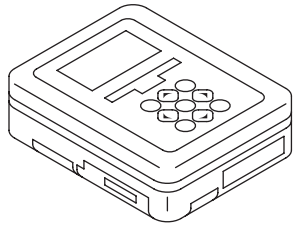 ST1B020XU0	1B020XU0	SUBARU SELECT MONITOR III	Used for troubleshooting the electrical system.

TEST HARNESS F

ILLUSTRATION	TOOL NUMBER	DESCRIPTION	REMARKS
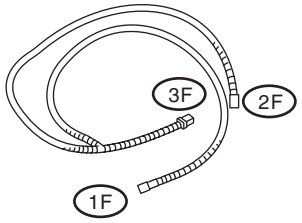 ST98299FC010	98299FC010	TEST HARNESS F	Used when measuring voltage and resistance of side airbag module harnesses.

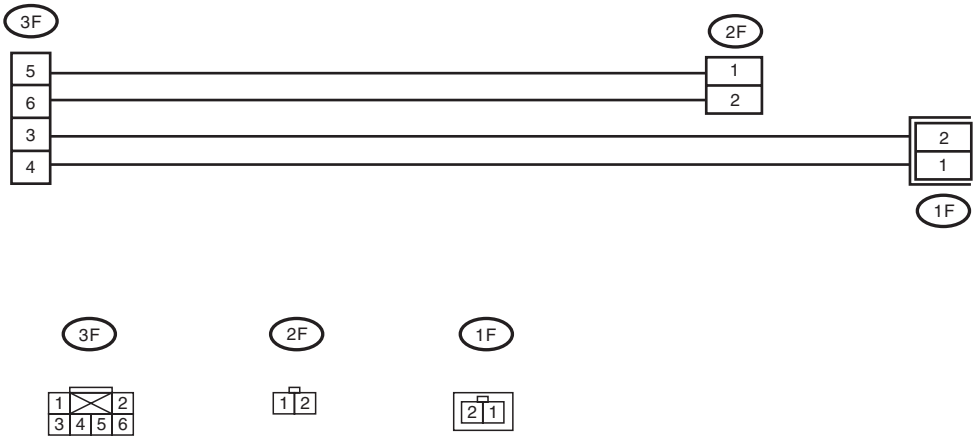

AB-00999

TEST HARNESS D

ILLUSTRATION	TOOL NUMBER	DESCRIPTION	REMARKS
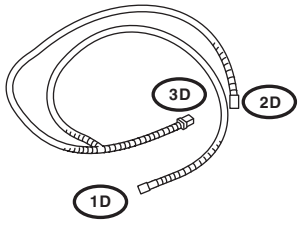 ST98299AG060	98299AG060	TEST HARNESS D	Used when measuring voltage and resistance of the front seat belt buckle switch.

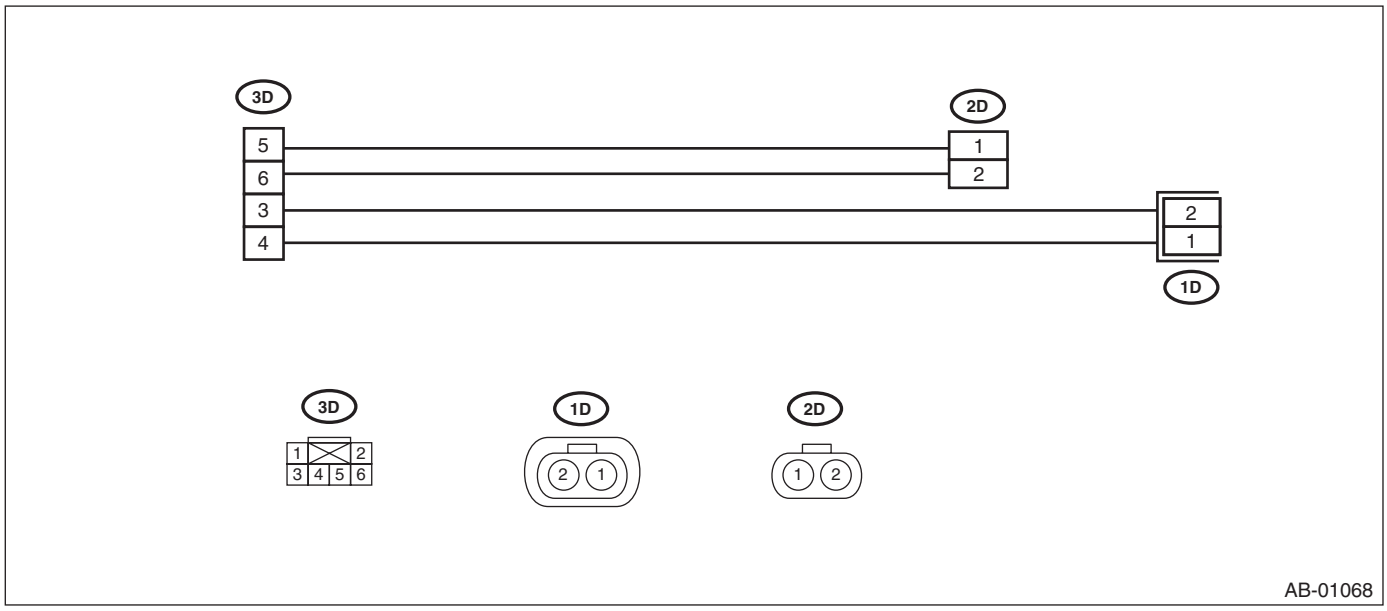

TEST HARNESS H

ILLUSTRATION	TOOL NUMBER	DESCRIPTION	REMARKS
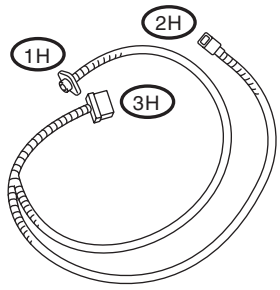 ST98299FA030	98299FA030	TEST HARNESS H	Used when measuring voltage and resistance of front sub sensor and seat position sensor.

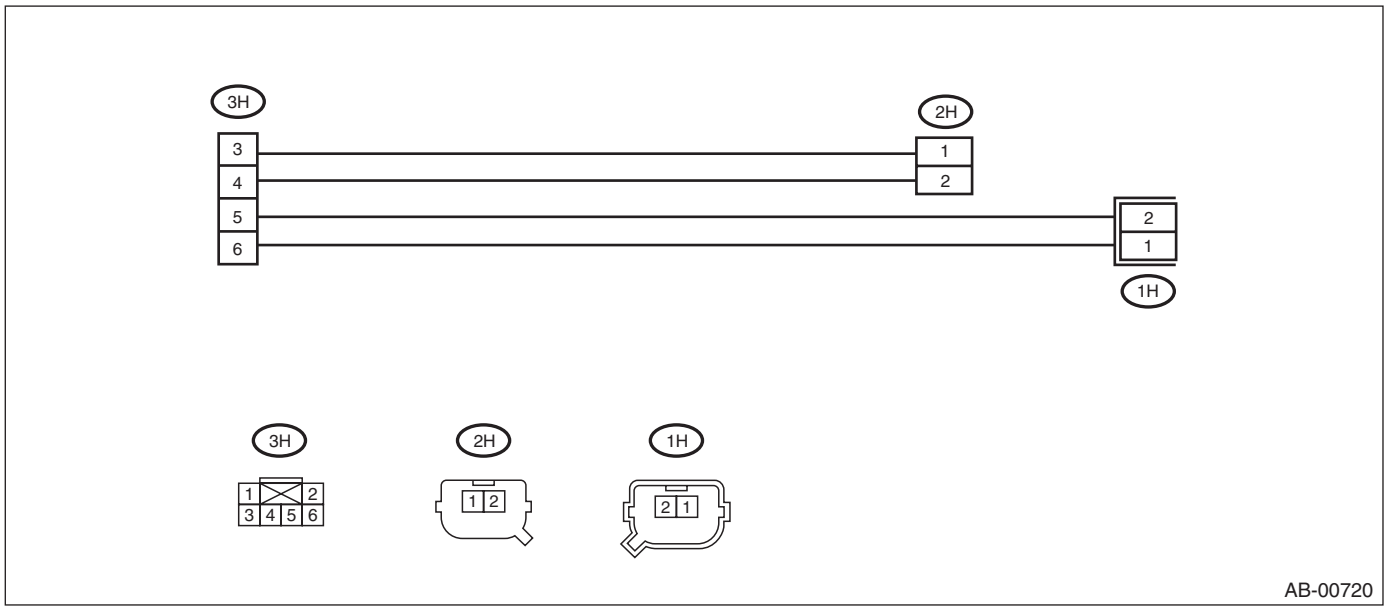

TEST HARNESS N

ILLUSTRATION	TOOL NUMBER	DESCRIPTION	REMARKS
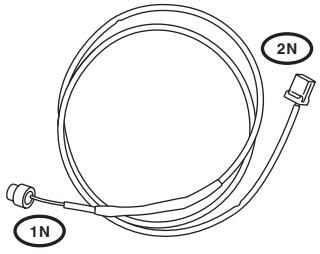 ST98299SA000	98299SA000	TEST HARNESS N	Used when measuring voltage and resistance of driver's airbag module and seat belt pretensioner.

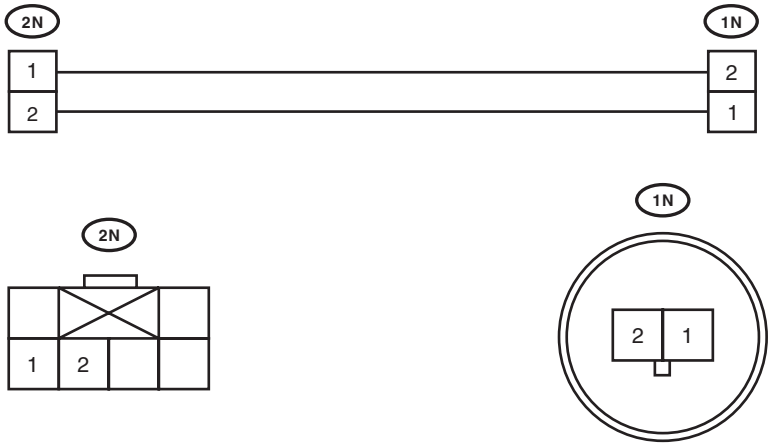

AB-01001

TEST HARNESS P

ILLUSTRATION	TOOL NUMBER	DESCRIPTION	REMARKS
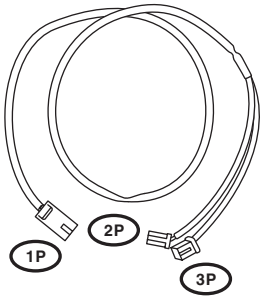 ST98299SA020	98299SA020	TEST HARNESS P	Used when measuring voltage and resistance of driver's airbag module harness and passenger's airbag module harness.

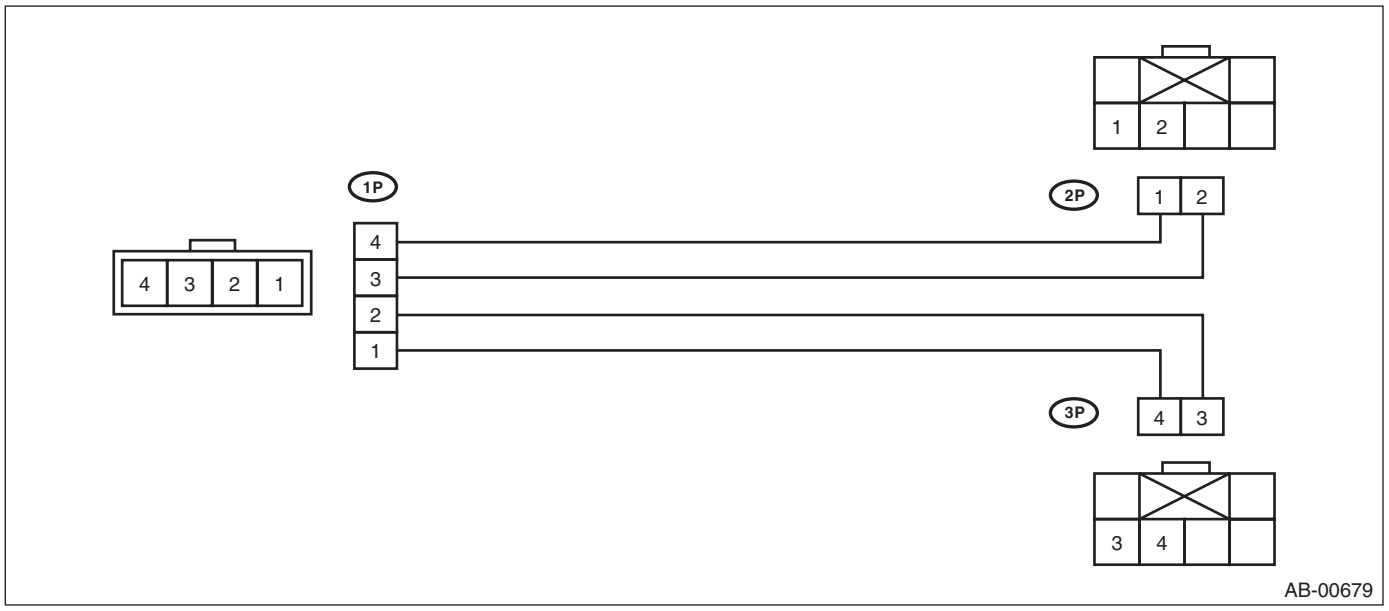

TEST HARNESS Q

ILLUSTRATION	TOOL NUMBER	DESCRIPTION	REMARKS
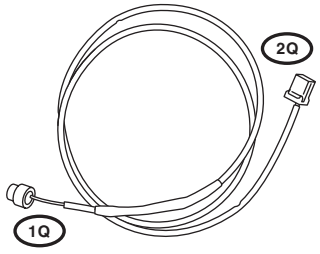 ST98299SA040	98299SA040	TEST HARNESS Q	Used when measuring voltage and resistance of driver's airbag module.

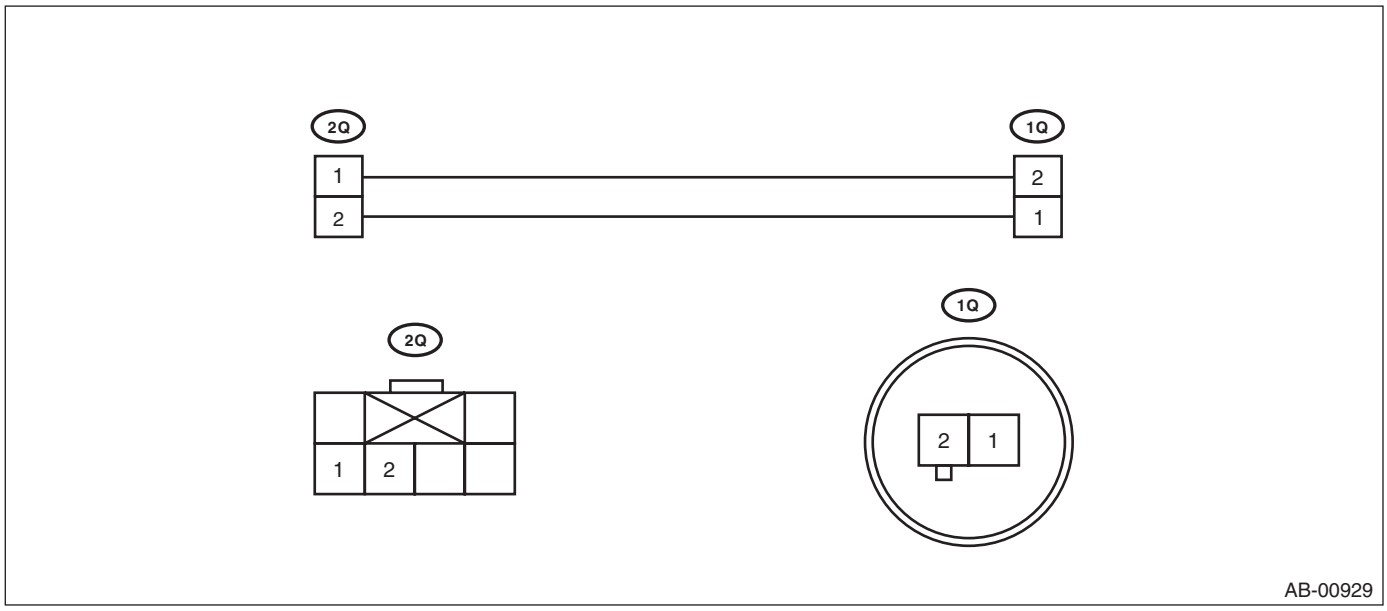

TEST HARNESS R

ILLUSTRATION	TOOL NUMBER	DESCRIPTION	REMARKS
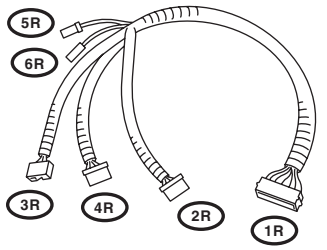 ST98299FE030	98299FE030	TEST HARNESS R	Used when measuring voltage and resistance of airbag control module.

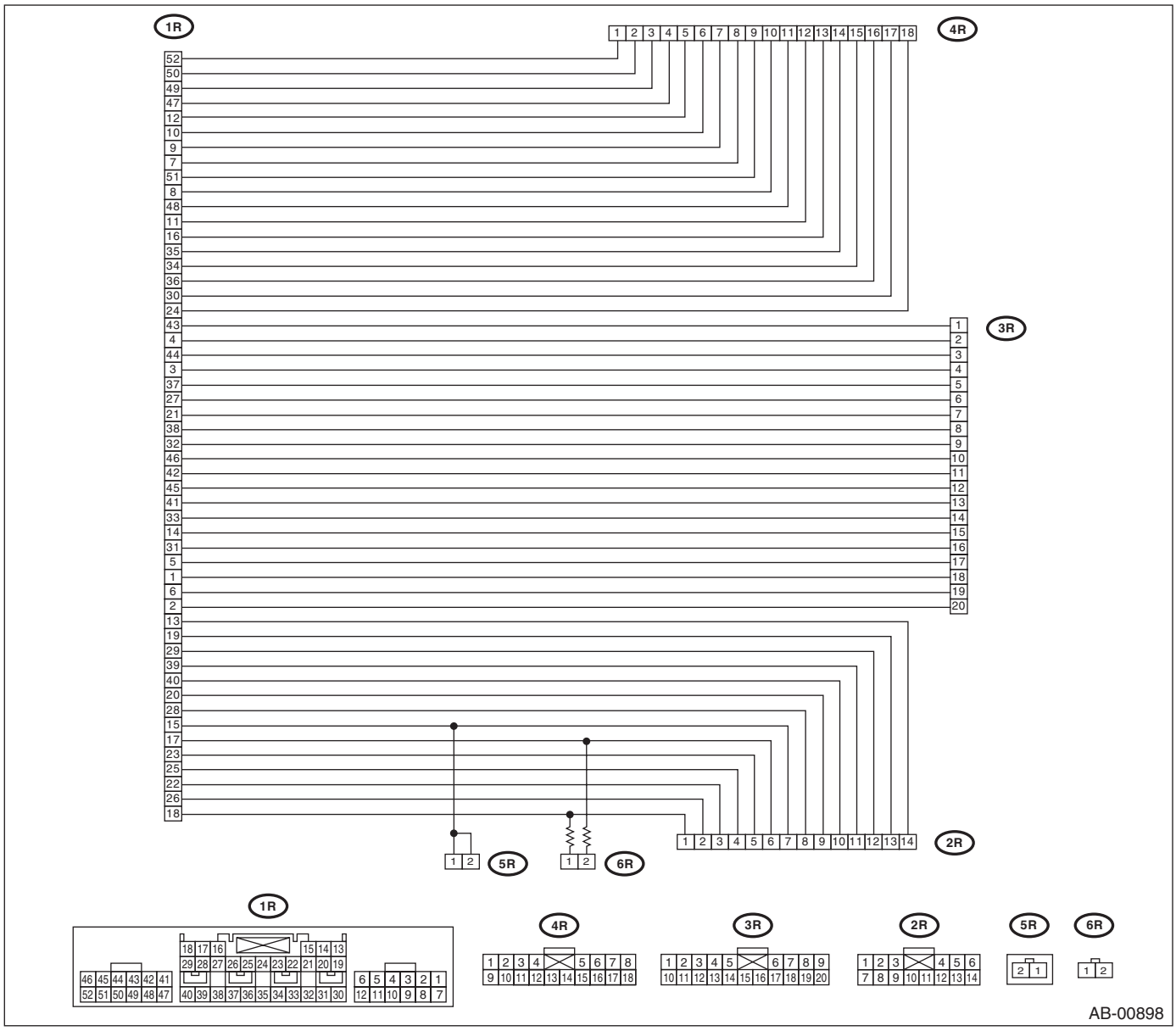

TEST HARNESS V

ILLUSTRATION	TOOL NUMBER	DESCRIPTION	REMARKS
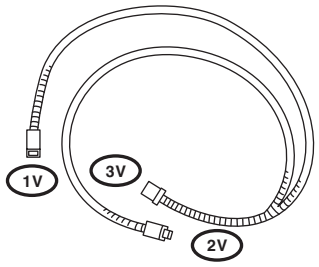 ST98299AG010	98299AG010	TEST HARNESS V	Used when measuring voltage and resistance of side airbag sensor.

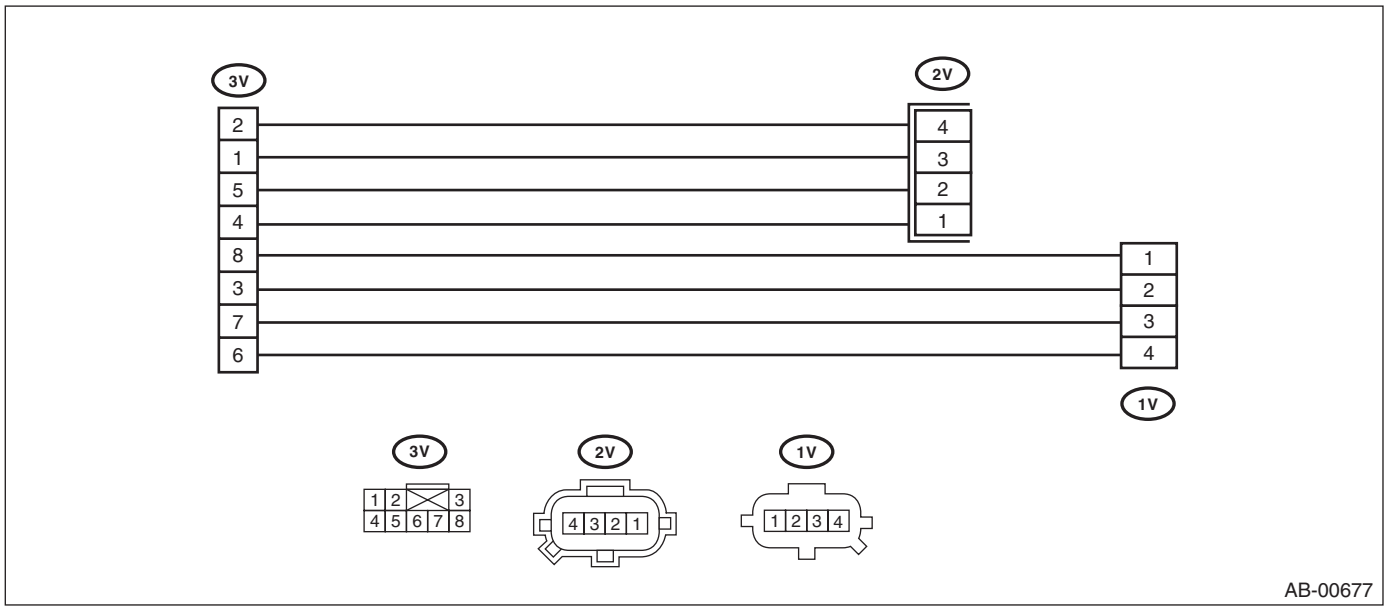

TEST HARNESS Y

ILLUSTRATION	TOOL NUMBER	DESCRIPTION	REMARKS
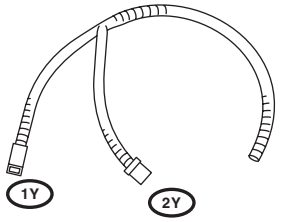 ST98299AG040	98299AG040	TEST HARNESS Y	Used for diagnosing seat belt buckle switch and seat position sensor.

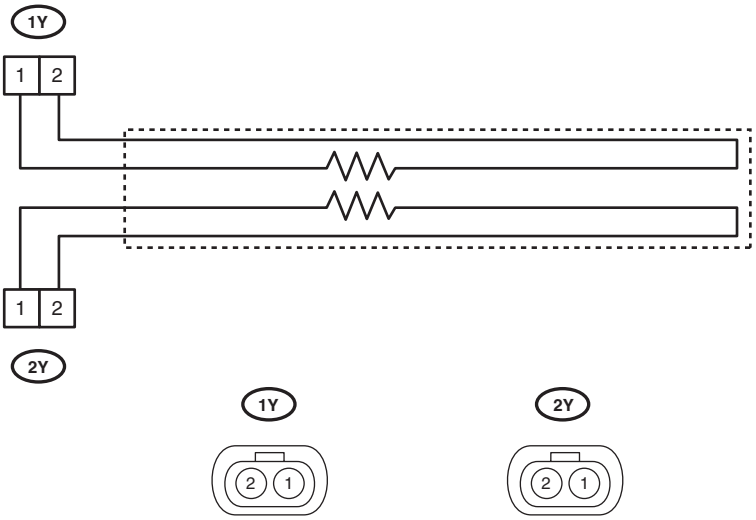

AB-01069

TEST HARNESS AB

ILLUSTRATION	TOOL NUMBER	DESCRIPTION	REMARKS
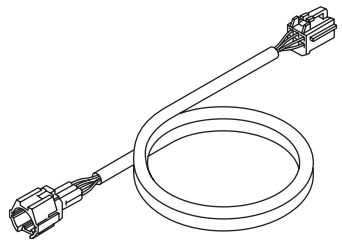 ST98299XA000	98299XA000	TEST HARNESS AB	Used when measuring voltage and resistance of occupant detection system.

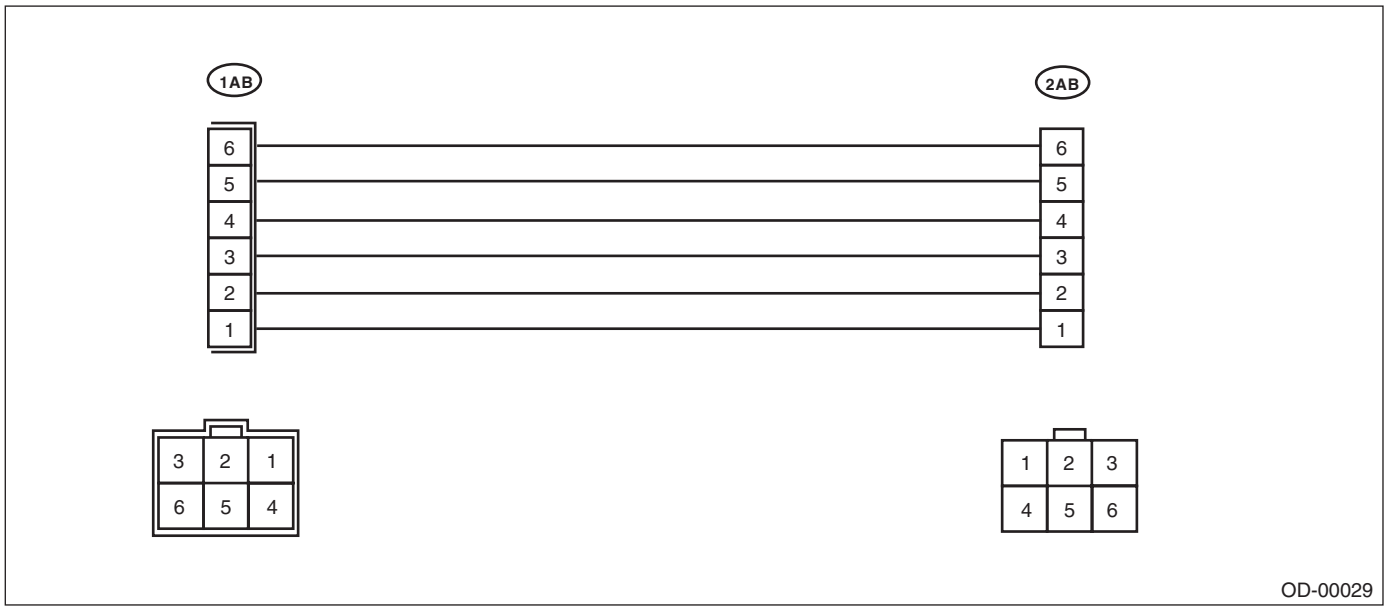

TEST HARNESS AC

ILLUSTRATION	TOOL NUMBER	DESCRIPTION	REMARKS
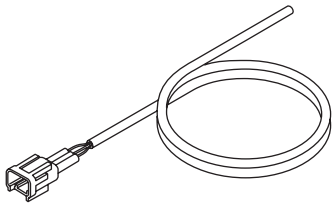 ST98299XA010	98299XA010	TEST HARNESS AC	Used for diagnosing seat belt tension sensor.

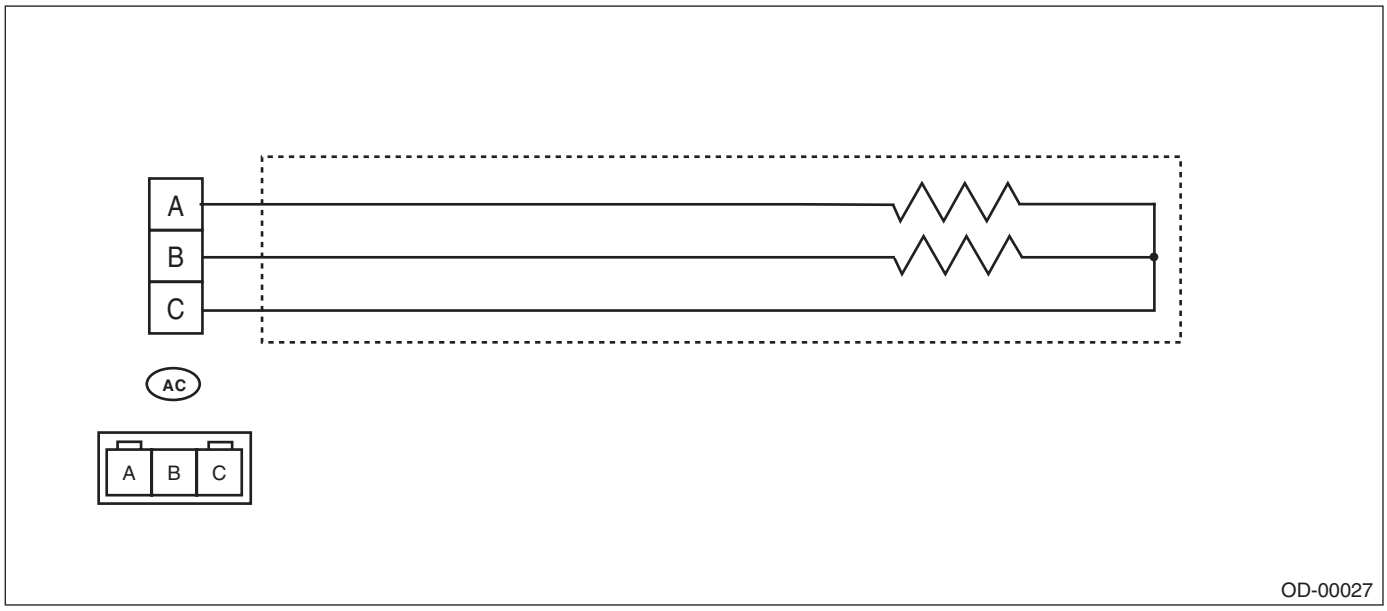

TEST HARNESS AD

ILLUSTRATION	TOOL NUMBER	DESCRIPTION	REMARKS
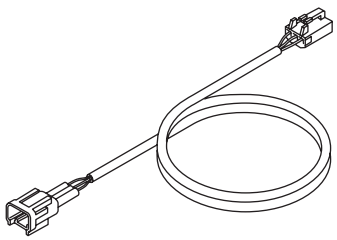 ST98299XA020	98299XA020	TEST HARNESS AD	Used when measuring voltage and resistance of the seat belt tension sensor.

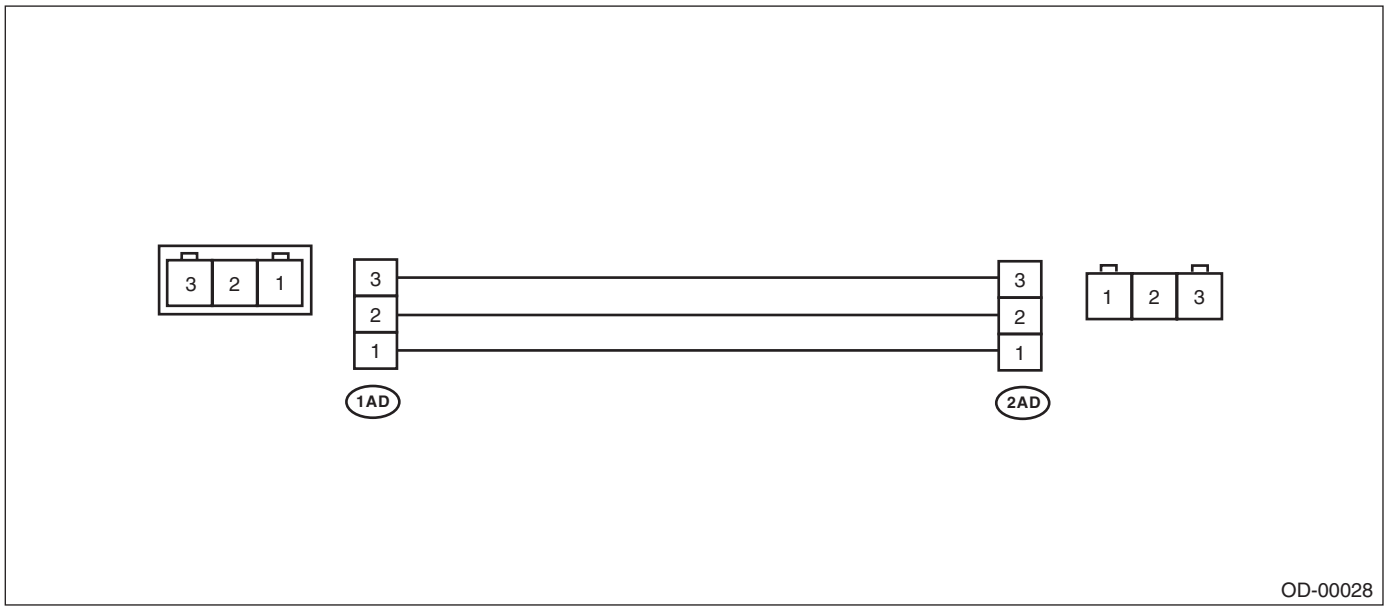

TEST HARNESS AE

ILLUSTRATION	TOOL NUMBER	DESCRIPTION	REMARKS
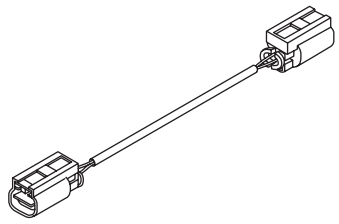 ST98299XA030	98299XA030	TEST HARNESS AE	• Used for diagnosing seat belt tension sensor. • Used together with the test harness Y.

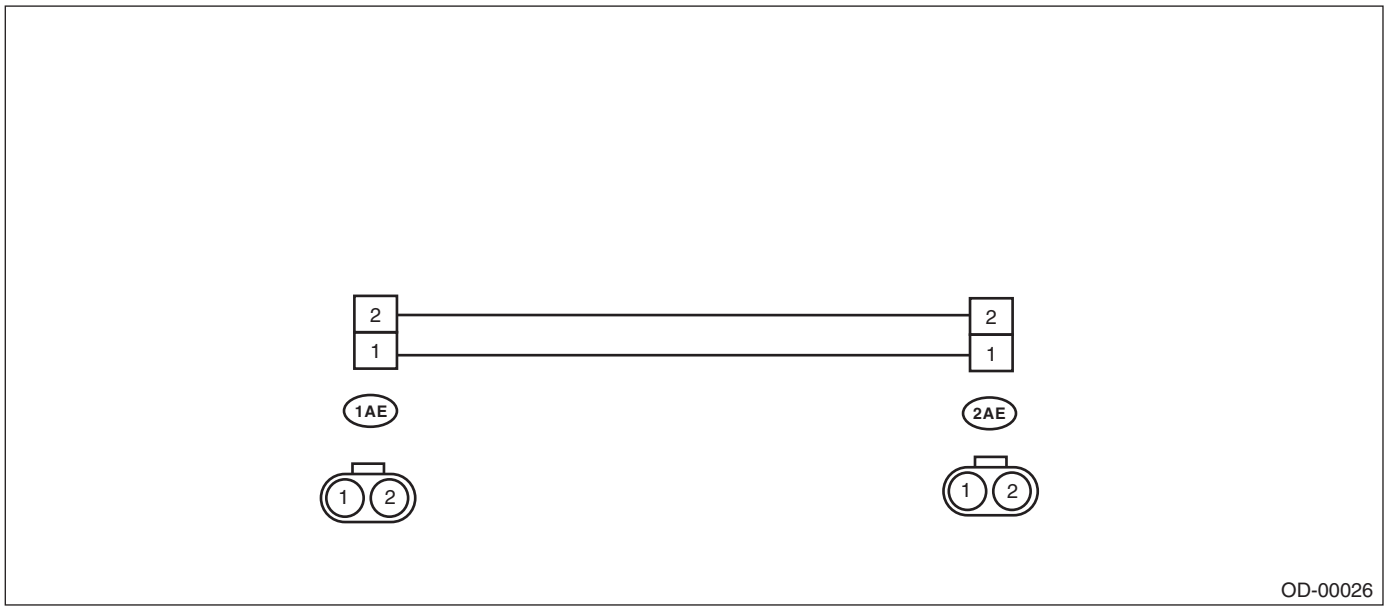

AIRBAG RESISTOR

ILLUSTRATION	TOOL NUMBER	DESCRIPTION	REMARKS
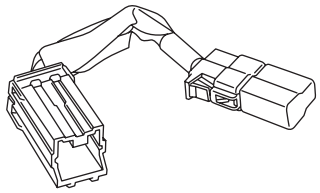 ST98299PA040	98299PA040	AIRBAG RESISTOR	Used in replacement of airbag module for which resistance value is same as airbag module.

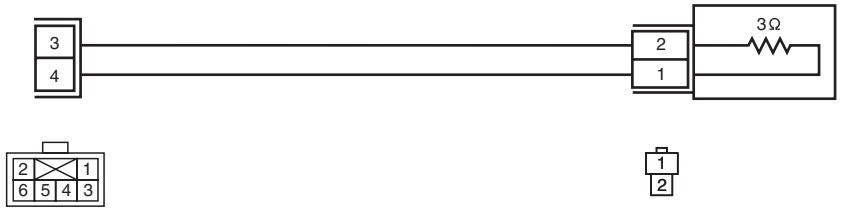

AB-00433